SZ-7524T

Operating Instructions

sub-zero® Controlled cooling, always

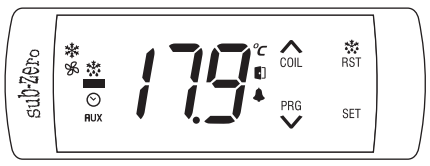

Touch Sensitive Temperature Controller

Features :

- 2 NTC probes for cold room temp. + Evap. coil temperature.
- Range : -50.0°C to 50.0°C (when rS = 0.1)
  -50°C to 50°C (when rS = 1)
- Relay outputs : Compressor + Defrost + Evap. Fan.
- Compressor protection algoriithm.
- Auto/Man defrosting facility (Time/Temp based).

CAUTION

WIRING: The probe and its corresponding wires should never be installed in a conduit next to control or power supply lines. The electrical wiring should be done as shown in the diagram. The power supply circuit should be connected to a protection switch. The terminals admit wires of upto 2.5sq mm.

WARNING: Improper wiring may cause irreparable damage and personal injury. Kindly ensure that wiring is done by qualified personnel only.

Maintenance: Cleaning: Clean the surface of the controller with a soft moist cloth. Do not use abrasive detergents, petrol, alcohol or solvents.
Notice: The information in this document is subject to change in order to improve reliability , design or function without prior notice and does not represent a commitment on the part of the company. In no event will the company be liable for direct, indirect, special, incidental or consequential damage arising out of the use or inability to use the product or documentation, even if advised of the possibility of such damages. No part of this manual may be reproduced or transmitted in any form or by any means without the prior written permission of the company.

Installation : Fixing and dimensions of panel models:
To fix the unit, slide the fastener ① through the guides ② as per the position shown in the figure. Move the fastener in the direction of the arrow, pressing tab ③ it permits to move the fastener in the opposite direction of the arrow.

Controller :Controller should be installed in a place protected by vibration, water and corrosive gasses and where ambient temperature does not exceed the values specified in the technical data.

Probe : To give a correct reading, the probe must be installed in a place protected from thermal influences, which may affect the temperature to be controlled.

Panel Cutout and Dimensions :

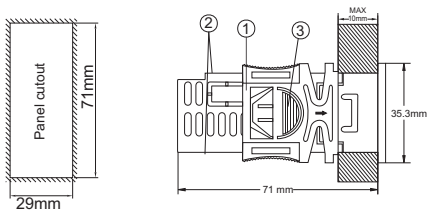

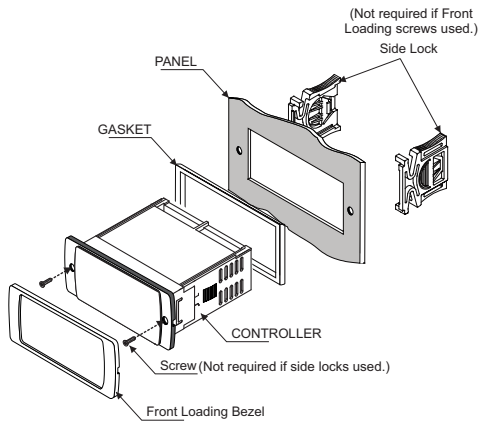

Suggested Wiring

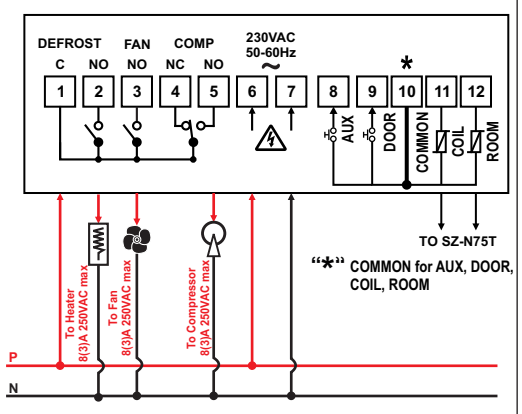

Caution:Wiring for 230Vac load only

TECHNICAL DATA

Housing	: Black ABS Plastic, Auto-extinguish
Front Cover	: Polycarbonate Plastic V0 Grade
Dimensions	: Frontal : 94 X 35.3 mm, Depth : 71mm
Panel Cutout	: 29 X 71mm
Mounting	: Flush panel mounting with fasteners
Protection	: IP65 Front (with gasket)
Connections	: Screw terminal blocks. ≤ 2.5sq mm terminal only.
Display	: 3 X 17mm 7 segment display & 9 LEDs for Indication
Data storage	: Non-volatile EEPROM memory
Power input	: 230 Vac ±15 % , 50-60Hz Standard. Others on request.
Relay output	: All relay 8(3)A,250VAC
Operating temp.	: 0°C to 60°C (non-condensing)
Operating humidity	: 20% to 85% (non-condensing)
Storage temp	: -25°C to 60°C (non-condensing)
Measuring Range	: -50.0°C to 50.0°C (when rS = 0.1) -50°C to 50°C (rS = 1)
Input	: 2 NTC probe, SZ-N75T (Rubber Type Sensor)
Resolution	: +/- 1°C / 0.1°C
Accuracy	: +/- 1°C

USER INTERFACE

∧ COIL **UP / Coil**	In Program mode: **Scroll through parameters & Increases parameter value.** To view coil temperature. Also used to check LL & LH log.
PRG ∨ **Down/ Program**	Touch and hold for 2sec **to enter into program mode.** In program mode : **Decreases parameter value**
❄ RST **Defrost / Reset**	This key will mute the visual alarm.
	This key will start a manual defrost cycle if pressed for 2 sec. Press again for 2 seconds it will come out of defrost mode and STOP defrost cycle. If P7 parameter is set to 0, or Coil temp. is greater than defrost stop temp. this key will remain inactive.
SET **Set**	In program mode: **set/save the changed value of parameter.**
∧ COIL + ❄ RST	If "**nd**" parameter is set to Pr2 or SP and ∧ COIL + ❄ RST keys pressed simultaneously, display will show Room Temperature.

INDEX

Sr. No.	Para.	Description
1	Set Point	Compressor relay set point.
2		Set other parameter.
3	P2	High temperature limit.
4	P3	Low temperature limit.
5	HS	Maximum Set Point limit.
6	LS	Minimum Set Point limit.
7	P4	Differential for compressor relay ON condition.
8	P5	Probe calibration for room.
9	P6	Time delay (compressor relay restart after cutoff).
10	Ot	Minimum ON time for compressor relay.
11	E1	Compressor relay status in probe fail.
12	Cn	Compressor relay OFF time during probe fault.
13	Cy	Compressor relay ON time during probe fault.
14	E2	Set type of defrost
15	E3	Set drip time for defrost water to drain out.
16	E4	Set post drip time.
17	E5	Defrost duration during coil probe fail.
18	E6	Computation method for defrost.
19	P7	Defrost duration & manual defrost.
20	P8	Defrost frequency.
21	P9	Power ON defrost delay.
22	L1	Evap. fan stop temp Coil.
23	L2	To set time delay between Evap. fan relay restart time
24	L3	Evap. Fan operation when compressor is OFF.
25	L4	Evap. Fan differential (Hysteresis).
26	L5	Probe 2 offset calibration (Evap. fan coil probe)
27	L6	Evap. fan status during defrost.
28	L7	Defrost stop temperature (Evap Coil probe).
29	do0	Activate or deactivate door open digital input.
30	do1	Door Open fault Sensing delay.
31	do2	Compressor / Fan Status on Door Open Fault.
32	do3	Delay time for Temperature updating at door open digital input fault.
33	CF0	Activate or deactivate Compressor Fault digital input.
34	CF1	Compressor Fault digital input Sensing delay.
35	CF2	Compressor / Fan Status on Compressor Fault digital input.
36	CF3	Set reset mode for Compressor output, on Compressor Fault digital input.
37	CF4	No of retrials of compressor when Manual reset is selected.
38	ddF	Display during defrost.
39	nd	Default (Normal) Display.
40	dd	Delay the display of temperature.
41	Ad	Time delay at Power ON for alarm indication.
42	rS	To set controller Resolution
43	PA	Change Password
44	LP	Keypad Lock
45	FS	Restore factory defaults
46	EP	End Programming
47		LED Indications
48		Operating Messages
		Password Function
		Temperature Logging
		User Selectable Default Values

Parameter List :

1 Set point — Function: To set compressor relay set point.

Touch & hold SET key for 2 seconds.

Display will show set value. The set point value can now be modified by using the UP/DOWN key. After selecting the desired value, touch the set key and user can see "- - -" which confirms that the set point has been stored in memory.

rS = 0.1 Min	Max	Fac.	rS = 1 Min	Max	Fac.
LS+1.0	HS-1.0	0.0°C	LS+1	HS-1	0°C

2 To set other Parameters. — Display will flash "P2". To select other parameters, use UP/DOWN keys.

Touch & hold PRG key for 2 seconds.

3 P2 Parameter — Function: To set maximum allowable high temperature limit.

Example: If this parameter is set to 50.0°C and the temperature reaches or goes above 50.0°C, display will show Ht (High Temp.) indicating that the temperature has reached or gone above the value set in this parameter.

Ht (Message on display)

rS = 0.1 Min	Max	Fac.	rS = 1 Min	Max	Fac.
P3+1.0	50.0°C	50.0°C	P3+1	50°C	50°C

4 P3 Parameter — Function: To set minimum allowable low temperature limit.

Example: If this parameter is set to -50.0°C and the temperature reaches or goes below -50.0°C, display will show Lt (Low temp) indicating that the temperature has reached or gone below the value set in this parameter.

Lt (Message on display)

rS = 0.1 Min	Max	Fac.	rS = 1 Min	Max	Fac.
-50.0°C	P2-1.0	-50.0°C	-50°C	P2-1	-50°C

5 HS Parameter — Function: To set Maximum set point limit.

Once set at a particular value, this will not allow the set point to go above this value.

Example: Setting this parameter at 50.0°C will not allow the set point to go above 49.0°C (HS-1.0).

SP = Set Point

rS = 0.1 Min	Max	Fac.	rS = 1 Min	Max	Fac.
SP+1.0	50.0°C	50.0°C	SP+1	50°C	50°C

6 LS Parameter — Function: To set Minimum set point limit.

Once set at a particular value, this will not allow the set point to go below this value.

Example: Setting this parameter at -50.0°C will not allow the set point to go below -49.0°C (LS+1.0).

SP = Set Point

rS = 0.1 Min	Max	Fac.	rS = 1 Min	Max	Fac.
-50.0°C	SP-1.0	-50.0°C	-50°C	SP-1	-50°C

7 P4 Parameter — Function: To set the differential for compressor relay ON condition.

Differential between cut out and cut in temperature can be set between 1.0°C to 20.0°C.

Example: If the set point is set at 10.0°C and differential (P4) is set at 2.0°C, then when the room temp reaches 10.0°C, the compressor relay will cut out. Since the differential is 2.0, the compressor relay will cut in (restart) at 12.0°C (10.0°C+2.0°C).

rS = 0.1 Min	Max	Fac.	rS = 1 Min	Max	Fac.
1.0°C	20.0°C	2.0°C	1°C	20°C	2°C

8 P5 Parameter — Function: To set room probe calibration.

In time it may be possible that the display may be offset by a degree or so.
To compensate for this error, user may need to add or minus the degrees required to achieve the correct temperature.

Example : The room temperature on the display is 28.0°C, whereas the actual room temperature is 30.0°C. User will have to set the P5 parameter to 2.0, which means that once out of the programming mode, the room temperature on display will be 30.0°C (28.0°C+ 2.0°C).

rS = 0.1 Min	Max	Fac.	rS = 1 Min	Max	Fac.
-10.0°C	10.0°C	0.0°C	-10°C	10°C	0°C

9 P6 Parameter — Function: To set time delay between compressor relay restart.

This parameter is used to protect the compressor from restarting in a short period of time.

Example: If this parameter is set at 3 minutes, the compressor relay goes OFF at the set point, it will not restart for a minimum of 3 minutes, even if the differential is achieved earlier. This parameter is good to protect the life of the compressor.

Flashing — Time delay in progress

Min	Max	Fac.
0 Min	99 Min	3 Min

10 Ot Parameter — Function: Minimum ON Time For Compressor relay.

This parameter is used to protect the compressor so that there is enough time for oil to return back to the compressor. This delay starts once the compressor relay is ON.

Example: If this parameter is set at 1Min and if the temperature is achieved before 1 minute, then the compressor relay will remain ON for minimum 1 minute, though set point is achieved.

Min	Max	Fac.
0 Min	20 Min	0 Min

11 E1 Parameter — Function : Compressor relay status in case of Control Probe Failure.

When set to
oFF = Compressor relay status is OFF.
on = Compressor relay status is ON.
CYC = Compressor relay performs a duty cycle for Cn for minutes OFF and Cy for minutes ON.

Min	Max	Fac.
oFF	CYC	CYC

12 Cn Parameter — Function : Compressor relay OFF Time during Control probe fault.

(This will be considered only when E1 is selected CYC).

Example : If this parameter is set to 4 minutes, then compressor relay will be OFF for 4 minutes while performing the duty cycle.

Min	Max	Fac.
1 Min	99 Min	4 Min

13 Cy Parameter — Function : Compressor relay ON Time during Control probe fault.

(This will be considered only when E1 is selected CYC).

Example : If this parameter is set to 10 minutes, then compressor relay will be ON for 10 minutes while performing the duty cycle.

Min	Max	Fac.
1 Min	99 Min	10 Min

14 E2 Parameter — Function : To set type of defrost.

ELE = Electric defrost in which case compressor is OFF.
Hot = Hot gas defrost where compressor is ON.

Min	Max	Fac.
ELE	Hot	ELE

15 E3 Parameter — Function : To set drip time for defrost water to drain out.

This is the time for which the fan, compressor, heater will stay OFF so that the defrost water can drip & drain out.

Min	Max	Fac.
0 Min	99 Min	3 Min

16 E4 Parameter — Function : To set post drip time .

Example : This is the time where compressor goes ON after drip time.
Note : In electric defrost compressor will ON only if Room temp ≥ SP + diff. but it will not check this in hot gas defrost.

Min	Max	Fac.
0 Min	99 Min	1 Min

17 E5 Parameter — Function: Defrost duration during Coil probe failure (Only manual).

Example: If this is set to 5 min, then manual defrost for 5 min will take place during Coil probe fail.

Min	Max	Fac.
1 Min	10 Min	5 Min

18 E6 Parameter — Function: To set computation method for defrost.

rEt : Defrost Frequency time calculation will start once the Controller is ON.

Example: If this parameter is set to 6Hrs, then defrost will happened at every 6Hrs.

CrH : Defrost Frequency time calculation will be done only When Compressor is ON.

Example : If this parameter is set to 6Hrs, then after every 6Hrs of Comp. ON defrost will happen.

Min	Max	Fac.
rEt	CrH	rEt

19 P7 Parameter — Function: To set Defrost duration & Manual Defrost.

This is maximum amount of time allowed for defrost. If set to 0, there will be no defrost cycle.

Example : If P7 is set to 15 Mins, E6 is set to rEt and P8 is set to 1 Hr then after every 1 Hr defrosting will take place for 15 mins.

Min	Max	Fac.
0 Min	99 Min	30 Min

20 P8 Parameter — Function : To set Defrost frequency.

This is the amount of time between two defrost cycles.

Example : Same as P7 parameter.

Min	Max	Fac.
1 Hr	31 Hrs	6 Hrs

21 P9 Parameter — Function : To set power ON defrost delay.

Example : If P9 parameter is 30 minutes then at power after 30 minutes defrosting will take place once.

Min	Max	Fac.
0 Min	99 Min	30 Min

22 L1 Parameter — Function: Evap. fan stop temp (Coil).

This setting is used to limit the max temperature beyond which the Evaporator fan will cut OFF.

Example : If this parameter is set to 2.0ºC, then Evap. Fan will cut OFF at 2.0ºC.

rS = 0.1 Min	Max	Fac.	rS = 1 Min	Max	Fac.
-50.0°C	50.0°C	2.0°C	-50°C	50°C	2°C

23 L2 Parameter — Function: To set time delay between Evap. fan relay restart time

Example : If this parameter sets at 3 minutes, the Evap. Fan relay will cutoff at the temp. set by L1 parameter but the fan will not come ON for a minimum of 3 minutes even if L4 is achieved earlier.

Min	Max	Fac.
0 Min	20 Min	1 Min

24 L3 Parameter — Function: Evap. Fan operation when compressor is OFF.

oFF = Evaporator fan is OFF when compressor is OFF, and it will be ON depending on Coil Temperature and its set point .
on = Evaporator Fan will be ON /OFF independent of Compressor Status according to Coil probe temperature.

Min	Max	Fac.
oFF	on	on

25 L4 Parameter — Function: Evap. Fan differential (hysterisis).

Example: If L1 parameter is set to 2.0°C, and the L4 is set to 2.0°C, then Evap. fan will cut OFF at 2.0°C and restart only at 0.0°C

rS = 0.1 Min	Max	Fac.	rS = 1 Min	Max	Fac.
1.0°C	20.0°C	2.0°C	1°C	20°C	2°C

26 L5 Parameter — Function: To set probe 2 offset calibration (Evap. fan coil probe).

In time it may be possible that the temp. on the display may be offset by a degree or so. To compensate for this error, you may need to add or minus the degrees required to achieve the correct temperature. Setting value is from -10.0°C to 10.0°C

rS = 0.1 Min	Max	Fac.	rS = 1 Min	Max	Fac.
-10.0°C	10.0°C	0.0°C	-10°C	10°C	0°C

27 L6 Parameter — Function: Evaporator Fan status during defrost.

oFF= In Manual or Auto Defrost (Hot gas or Heater), Fan will be OFF.
on = In Manual or Auto Defrost (Hot gas or Heater) , Fan will be ON.

Min	Max	Fac.
oFF	on	oFF

28 L7 Parameter — Function : To set Defrost stop temperature (Evap. coil probe)

This is the maximum temperature allowable at which the defrost process will stop.

Example : If this parameter is set to 8.0ºC, then if defrosting is in progress then when temperature reaches 8.0ºC, the defrost process will stop.

Defrost will stop according to P7 & E5 parameter, whichever is achieved earlier.

rS = 0.1 Min	Max	Fac.	rS = 1 Min	Max	Fac.
-50.0°C	50.0°C	8.0°C	-50°C	50°C	8°C

29 do0 Parameter — Function : To activate or deactivate door opendigital input function.

di5 = Door open digital input is disabled.
oPn = Door open digital input is activated when contact is open.
CLo = Door open digital input is activated when contact is closed.

Min	Max	Fac.
di5	CLo	di5

30 do1 Parameter — Function : To set door open fault sensing delay.

Example : If d01 = 5seconds and if digital input (Fault) is present for 5 seconds then fault is detected.

Min	Max	Fac.
0 sec	99 sec	5 sec

31 do2 Parameter — Function : To set compressor / fan status on Door open fault.

nOA = No action will be performed.
CoF = Compressor will be OFF.
FoF = Fan will be OFF.
FCF = Fan and Compressor will be OFF.

Min	Max	Fac.
nOA	FCF	nOA

32 do3 Parameter — Function : To set delay time for temperature updating at Door open digital input fault.

Example : This Parameter is set to 60sec, Room Temperature is -18.0°C & Door open condition occurs then Room Temp value -18.0°C at Door open condition will be held for the 60sec even if Room Temperature is rising.
After over the Temperature hold duration display temperature will be increased by 0.1°C at every 1sec until it reaches current Room Temperature.

Min	Max	Fac.
0 sec	180 sec	10 sec

33 CF0 Parameter — Function : To activate or deactivate compressor fault digital input.

diS = Compressor fault digital input is disabled.
oPn = Compressor fault digital input is activated when contact is open.
CLo = Compressor fault digital input is activated when contact is closed.

Min	Max	Fac.
diS	CLo	diS

34 CF1 Parameter — Function : To set compressor fault digital input sensing delay.

Example : If CF1 = 5seconds and if compressor digital input (Fault) is present for 5 seconds then fault is detected.

Min	Max	Fac.
0 sec	99 sec	5 sec

35 CF2 Parameter — Function : To set compressor / fan status on Compressor fault digital input.

nOA = No action will be performed.
CoF = Compressor will be OFF.
FoF = Fan will be OFF.
FCF = Fan and Compressor will be OFF.

Min	Max	Fac.
nOA	FCF	nOA

36 CF3 Parameter — Function : To set reset mode for Compressor output, on Compressor fault digital input.

Aut = Auto Reset.
MAn = Manual Reset after CF4 retrials in 1 hour.

Example: If this parameter set to "MAN" mode & CF4 is set to 5 then, COMP. fault will be cleared after 5 retrials only after pressing reset key for 2 seconds.
If this parameter is set to "AUTO" mode then COMP. fault will be cleared automatically when it is healthy.

Min	Max	Fac.
Aut	MAn	Aut

37 CF4 Parameter — Function : No of retrials of compressor when Manual reset is selected.

Example : As mentioned in CF3

Min	Max	Fac.
1	10	5

38 ddF Parameter — Function : This parameter is used to select display while the Defrost Cycle is in progress.

Pr1 = Room Temperature
dF = Defrost Label

Min	Max	Fac.
Pr1	dF	Pr1

39 nd Parameter — Function : Default (Normal) display

Pr1 = Room Temperature.
Pr2 = Coil Temperature.
SP = Set Point

Min	Max	Fac.
Pr1	SP	Pr1

40 dd Parameter — Function : This parameter is used to delay the display of temperature update by the set in this parameter.

Each value corresponds to 5 seconds, if the value is set to 1, it corresponds to 5 seconds, if it is set to 2, it corresponds to 10 seconds and so on.

For example, if this parameter is set to 1, temperature on the display will be updated after 5 seconds. The same value will be considered for calculation and logging.

Display delay parameter is applicable only when temperature is increasing (rising). When temperature is decreasing (falling) this parameter will not be applicable.
If this parameter is set to 0, this feature will be disabled.

Min	Max	Fac.
0	36	0

41 Ad Parameter — Function : This parameter is used to set the time delay at Power ON for Alarm Indication.

Example: If this parameter is set to 20 minutes, once the controller is powered ON, no fault indication will be activated for 20 minutes.

Alarm delay is used only for High Temperature and Low Temperature, but not for Room Sensor fail.
If Control Probe Temperature reaches or goes above P2 parameter value, High Temperature (Ht) fault will displayed.

If Control Probe Temperature reaches or drops below P3 parameter value, Low Temperature (Lt) fault will displayed.
Differential of 1°C is considered for clearing the fault.

ON
Fault is present

Min	Max	Fac.
0 Min	99 Min	20 Min

42 rS Parameter — Function : To set controller resolution.

This parameter when set to 0.1, it will take all parameter in 0.1°C resolution.
This parameter when set to 1,it will take all parameter in 1°C resolution.

Note : Temperature and parameter will also change accordingly.

Min	Max	Fac.
0.1	1	-

43 PA Parameter — Function : To change Password.

User cannot enter into program mode & set mode, if correct password is not entered.

If the password is kept other then 0, user need to enter correct password to enter into set/program mode.

If password is 0, user can directly access set/program mode.

Min	Max	Fac.
-999	999	-

44 LP Parameter — Function: To lock keypad.

This parameter is used to lock the keypad so that tampering is not possible by by-standers.

unL = keypad unlocked
LoC = keypad locked

When locked all parameters can only be viewed, but not modified.

Note : If LP parameter is set to LoC and if user tries to change any parameter value, " LP" will flash on the display.

LP
Flashing

Min	Max	Fac.
unL	LoC	unL

45 FS Parameter — Function : To restore default settings of the controller.

When set to 1 all parameters are programmed to factory set values.
Useful to debug setting related Problems.

When set to,
0 = FS is disable.
1 = FS as per default value.
2 = FS as per user define

Min	Max	Fac.
0	2	-

46 EP Parameter — Function: To end programming.

To end programming press "**SET**" key — Once the key is pressed, the controller goes into the normal mode and displays the temperature and all settings are recorded.

47 LEDS

Compressor
ON: Compressor is ON.
OFF: Compressor is OFF.

Fan
ON: Evaporator Fan is ON.
OFF: Evaporator Fan is OFF.
FLASHING: Evaporator Fan is in time delay.

Defrost
ON: Defrost in progress.
FLASHING : Drip or post drip time.

Door Open
ON: Door Open.

Time Delay
ON: Compressor is ON and in time delay for switching OFF. (Ot parameter)
FLASHING: Compressor is in time delay and about to start.

Alarm
ON : Ht, Lt, PP, CF, do, CPP

AUX ON: Auxiliary fault is present.

°C ON: When temperature is displayed.

48 OPERATING MESSAGES

Ht High temperature alarm
Temperature above the maximum high temperature limit.

Lt Low temperature alarm
Temperature below the minimum low temperature limit.

PP Room Probe fail
Probe short circuit, circuit open or without probe, or temperature is > 50.0°C or <-50.0°C (when rS = 0.1) & > 50°C or <-50°C (when rS = 1)

CPP Coil Probe fail
Probe short circuit, circuit open or without probe, or temperature is > 50.0°C or <-50.0°C (when rS = 0.1) & > 50°C or <-50°C (when rS = 1)

CF AUX (Auxiliary) Input
Compressor fault present.

do Digital input
Door open.

LL Last low temperature
Last low temperature logged.

LH Last high temperature
Last high temperature logged.

dF Defrost
Defrost in progress.

rS In log function: When LL and LH values are cleared.

LP Keypad lock
Keypad is locked

Password function

●In Program mode:
Touch & hold " PRG " key for 2sec. Display will flash "P2" parameter if "PA" value is kept "0". If other than "0", then "PA' and "0" will flash. Use " ∧ "and " PRG " keys to enter the password. On entering correct value, display will flash the first parameter "P2". User can scroll through parameters using " ∧ " or " PRG " keys.

●In Set mode:
Touch & hold "**SET**" key for 2sec. Display will flash set point value if "PA" parameter value is kept to "0". If other than "0", then display will flash "PA" and "0". Use " ∧ " or " PRG " to enter the password. On entering correct value, display will flash set point value. User can set desired value using " ∧ "or " PRG " keys. To save the modified value use "**SET**" key.

High and Low temperature logging function

●How to see the logged values:
LL : Last Low temperature
LH : Last High temperature
Touch and hold " ∧ " key for 1sec. display will flash "LL" and the corresponding temperature for 4 seconds. After this, display will flash "LH" and the corresponding temperature for 4 seconds and come out of Log mode and will display Control probe temperature.

●How to reset the Logged values
While the display is showing the logged values, if user touch & hold the "**SET**" key for 1sec, the logged values will be cleared and "**rS**" will be displayed.
Log Values will get reset after Power ON/OFF.

User selectable Default values

User can set their own set of Default Set values for all parameters. If user wants to activate this feature, Program mode must be accessed and then change Factory set (FS) parameter accordingly.

This can be done by following steps:

- Modify values of set point and other parameters as desired by entering set mode and program mode respectively.
- Select FS parameter and touch "**SET**" key. While display flashing "0" , touch and hold " PRG " for 10sec. Controller will flash "-2". Then touch "**SET**" key. All the user defined parameter values will be stored as 'User Default set'.
- If user wants to use this set of parameters, access Program mode and set the FS parameter to "2". Controller will restore the user defined parameter values.

(**Note:** Keypad parameter LP and User lock parameter will be taken into consideration while modifying this parameter.)

Warranty: This product is warranted against defects in materials and workmanship for a period of one year from the date of purchase. During the warranty period, product determined by us to be defective in form or function will be repaired or, at our option, replaced at no charge. This warranty does not apply if the product has been damaged by accident, abuse, and misuse or as a result of service or modification other than by the company. This warranty is in lieu of any other warranty expressed or implied. In no event shall the company be held liable for incidental or consequential damages, including lost revenue or lost business opportunity arising from the purchase of this product.

02 / 03.02.2020